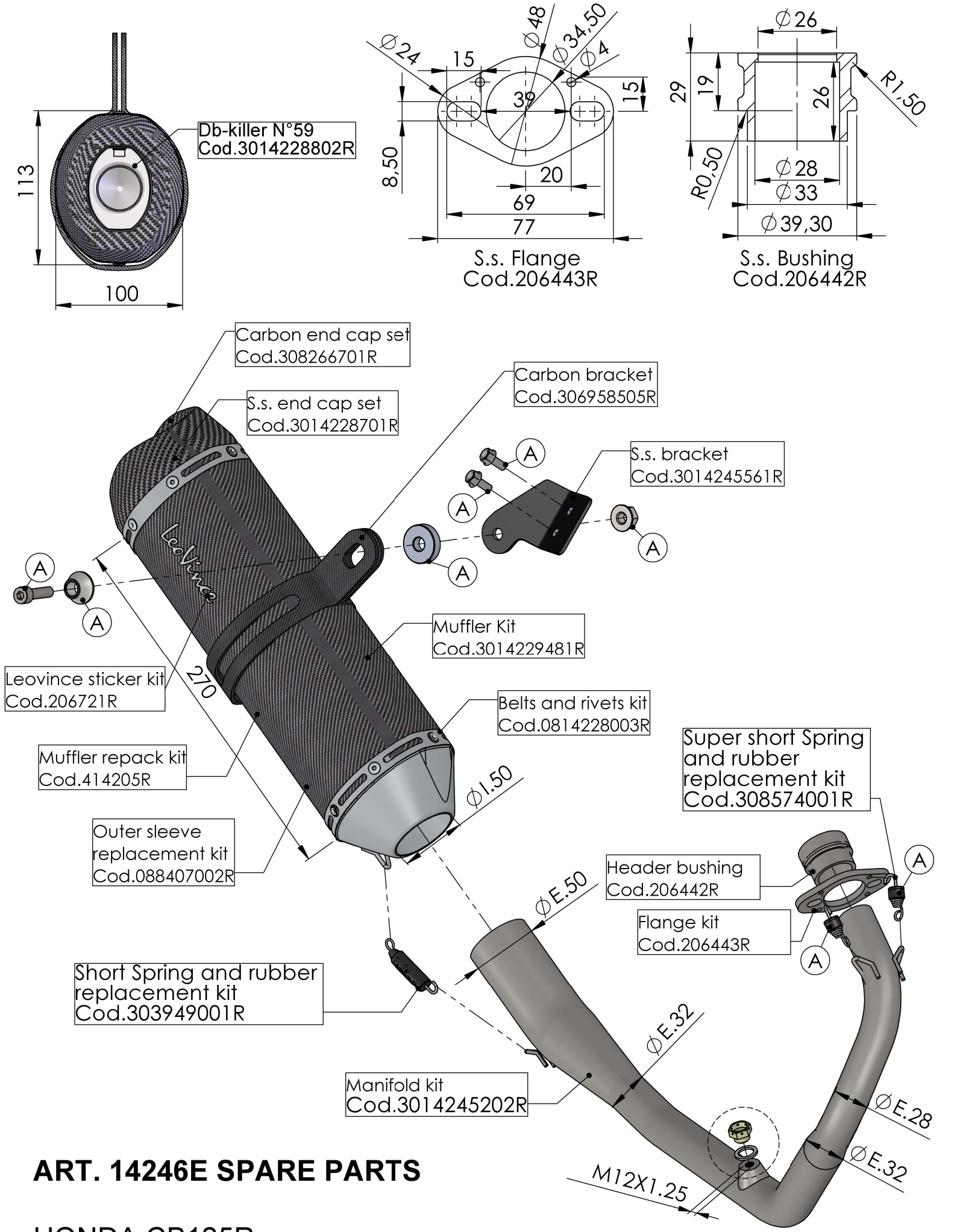

ART. 14246E SPARE PARTS

HONDA CB125R

Ⓐ FITTING KIT Cod. 3014245601R