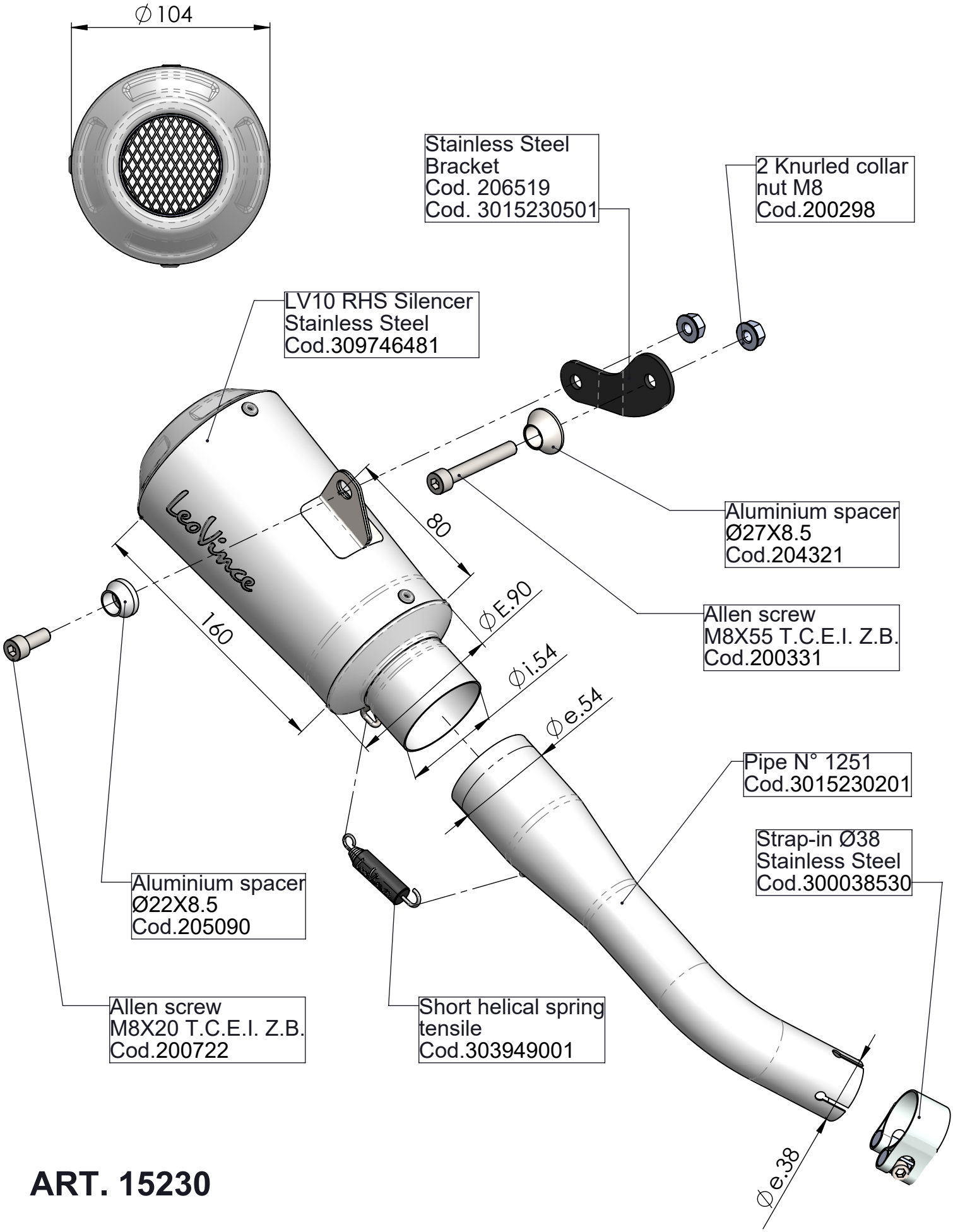

ART. 15230

KAWASAKI NINJA 125 - Z 125 '19

SLIP ON - LV1O - STAINLESS STEEL