L8086

08-04-20 REV.01

LeoVince Europe
leovince.com
info@leovince.com

LeoVince USA
leovince.com
infousa@leovince.com
+1-844-536-7625

INFORMAZIONI TECNICHE
TECHNICAL INFORMATION
INFORMATIONS TECHNIQUES
TECHNISCHE INFORMATIONEN
INFORMACIONES TECNICAS

ART. 8086
CAT ELIMINATOR

KTM DUKE 125 - KTM RC 125
KTM DUKE 390 - KTM RC 390
HUSQVARNA SVARTPILEN 401 / VITPILEN 401
(Replaces the stock pre-silencer and eliminates the catalyst)

TYPE: KTM IS Duke; KTM 125 Duke - KTM IS RC; KTM RC 125
KTM IS Duke/A/N.a. - KTM IS RC; KTM RC 390
HQV 401 var.A1/-, B1/-

NOTE

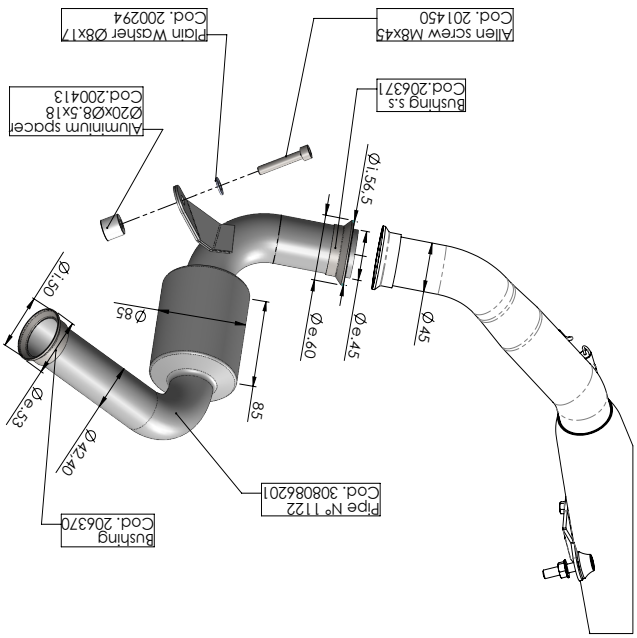

ART. 8086 KTM RC 125 - DUKE 125 - RC 390 - DUKE 390
HUSQVARNA SVARTPILEN 401 / VITPILEN 401

Collettore INOX / Stainless steel header pipe
per l'eliminazione del catalizzatore originale / kat eliminator link pipe

- it is advisable to optimize the carburation by remapping the stock ECU or by adopting an additional ECU unit.
- The link pipe can be fitted both with the stock exhaust and the LeoVince slip-on 14183E, 14184E, 14185E, 14186E, 15116, 15121, 15219,15219B